TrynEx International, LLC, 531 Ajax Drive, Madison Heights, MI 48071-2429 • www.snowexproducts.com

October 15, 2026
Lit. No. 94122, Rev. 10

SnowEx®

Automatixx®
ATTACHMENT SYSTEM

8'6" and 9'6" HDV™ Snowplow

Mild Steel Blades 77770, 77780
Stainless Steel Blades 77775, 77785
Big Box Assembly 77870-1, 77870-3

Parts List

AUTHENTIC SnowEx® PARTS & ACCESSORIES

A DIVISION OF DOUGLAS DYNAMICS, LLC

TABLE OF CONTENTS

HDV™ BLADE COMPONENTS 4

HDV HYDRAULIC, LIFT FRAME, AND T-FRAME BIG BOX ASSEMBLY 6

- T-Frame Assembly 6
- Headgear Assembly 8
- Hydraulic and Electrical Components 10
  - Hydraulic Unit 10
  - Lift and Angle Ram Components 12
  - Hoses and Fittings 13
  - Electrical Components 14
- Vehicle-Side Harness Diagram – 3-Port, 2-Plug System 15
- Headlamp Kits 16–17

Blade Components – 9'6" Shown

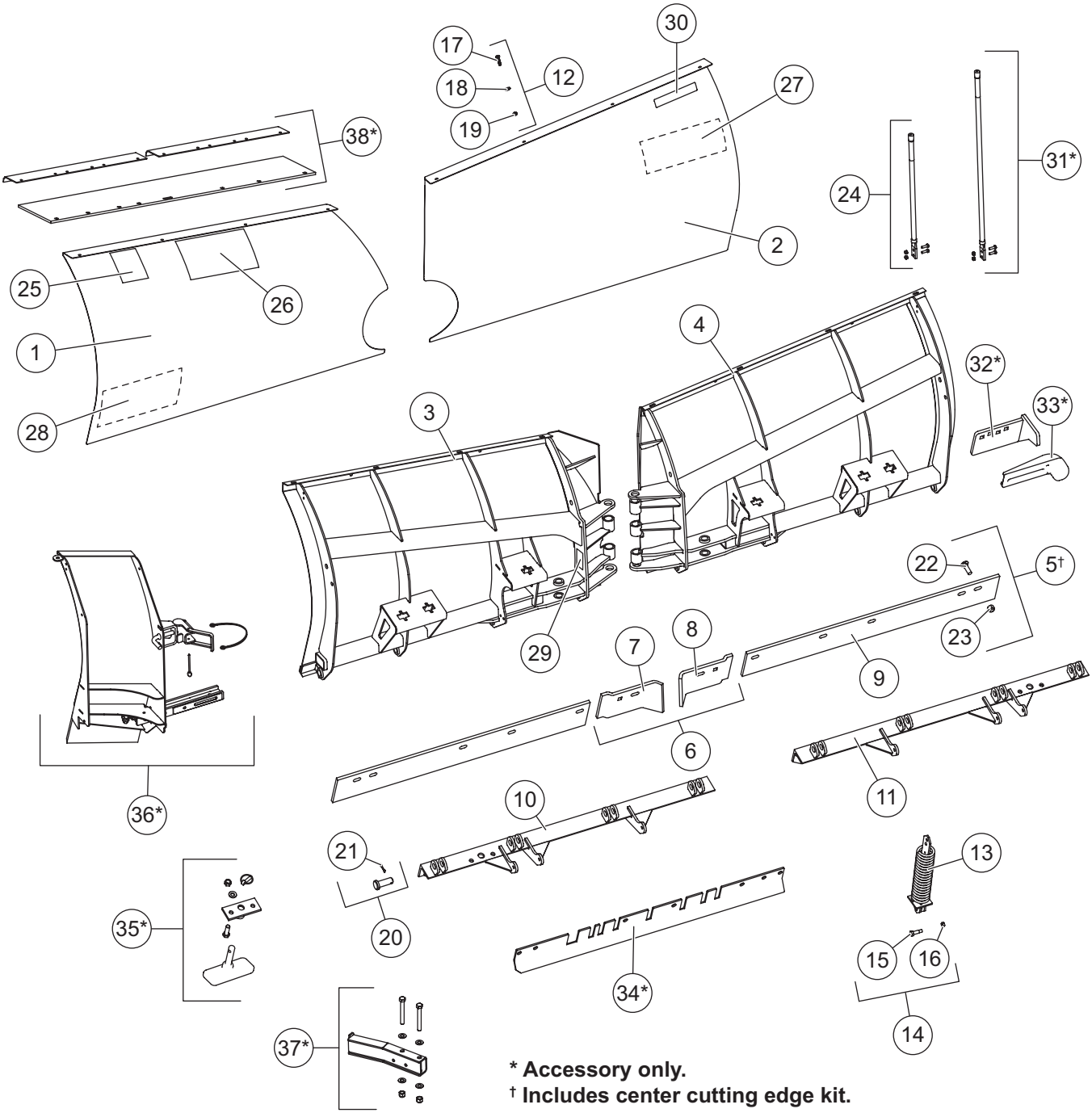

*** Accessory only.**
† Includes center cutting edge kit.

77770/77775/77780/77785 HDV Blade						
		Part Number				
		8'6" Blade		9'6" Blade		
Item	Description	MS	SS	MS	SS	
1	Moldboard Kit w/Fasteners & Labels – DS	85087	85088	85089	85090	
2	Moldboard Kit w/Fasteners & Labels – PS	85091	85092	85093	85094	
3	Frame, Base Angle & Spring Assembly – DS	85117		85118		
4	Frame, Base Angle & Spring Assembly – PS	85119		85120		
5†	Cutting Edge Kit, Complete (3/8)	84850		–		
	Cutting Edge Kit, Complete (1/2)	84851		84852		
	Cutting Edge Kit, Complete (5/8)	85365		85366		
6	Center Cutting Edge Kit	44894-1				
	Center Cutting Edge Kit (5/8)	85360*				
7	Center Cutting Edge – DS	44891-1				
	Center Cutting Edge (5/8) – DS	85351*				
8	Center Cutting Edge – PS	44890-1				
	Center Cutting Edge (5/8) – PS	85352*				
9	Cutting Edge – One Side (3/8)	44897		–		
	Cutting Edge – One Side (1/2)	44997		44898		
	Cutting Edge – One Side (5/8)	85363		85364		
10	Base Angle – DS	43128		43130		
11	Base Angle – PS	43129		43131		
12	Moldboard Fasteners Kit (set of 8)	43890	43289	43890	43289	
MS = Mild Steel		SS = Stainless Steel				

† Includes center cutting edge kit.

Blade Pins, Fasteners, Labels, Springs					
Item	Part	Description	Item	Part	Description
13	21452	Removable Spring Assembly	25	59900	Label – Warning/Caution, Snowplows
14	83624	Spring Assembly Bolt Kit	26	52593	Label – Attach/Detach, Automatixx®
15		7/16-14 x 1/2 x 1-5/8 Shoulder Bolt	27	85113	Label – Logo, SnowEx® – MS
16		7/16-14 Hex Locknut GB		85115	Label – Logo, SnowEx – SS
17		3/8-16 x 1 Button Cap Screw	28	85112	Label – Logo, HDV – MS
18		3/8 Hardened Flat Washer		85114	Label – Logo, HDV – SS
19		3/8-16 Hex Locknut GB	29	29256	Label – Warning, Foot Crush Hazard
20	85082	1 x 2-3/4 Clevis Pin w/Cotter	ns	85084	Label Kit – MS Blade (items 25–29)
21		1/4 x 1-3/4 Cotter Pin		85099	Label Kit – SS Blade (items 25–29)
22		5/8-11 x 2 Carriage Bolt G5	30		Label – Blade Size & Serial Number
23		5/8-11 Hex Locknut GB	ns	44763	Bolt Bag – Cutting Edge Kits (1 side, 5 sets of fasteners)
24	84525	24" Poly Blade Guide Kit (set of 2)			
Blade Accessories					
31*	84477	36" Poly Blade Guide Kit (set of 2)	36*	43510-1	Blade Wing Extensions Kit
32*	43885	Curb Guard Kit, Welded – PS & DS	37*	43082-1	Blade Stop Kit (set of 2)
33*	44404	Curb Guard Kit, Cast (single)	38*	85108	Deflector Kit (universal) 10"
34*	44283-5	Back Drag Edge Kit, 9'6" Blade	ns	85109*	Deflector Kit (universal) 18"
ns	44282-5*	Back Drag Edge Kit, 8'6" Blade	ns	43620*	Bolt Bag – Rubber Deflector
35*	43088	Shoe Kit (set of 2)			
MS = Mild Steel		SS = Stainless Steel	G = Grade		ns = not shown

* Accessory only.

T-Frame, Center Snow Control, and Pins

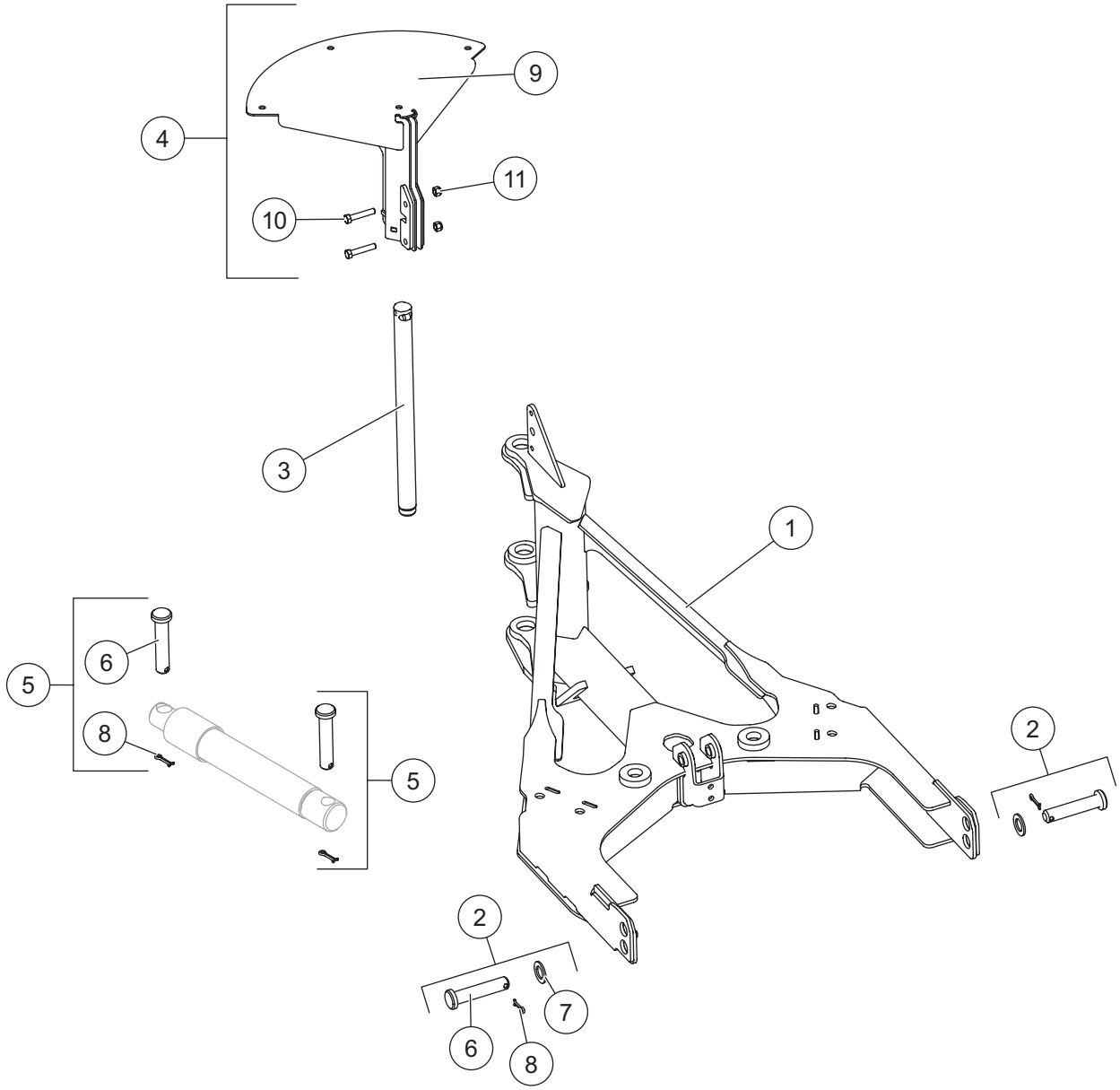

T-FRAME ASSEMBLY

T-Frame Components							
Item	**Part**	**Qty**	**Description**	**Item**	**Part**	**Qty**	**Description**
1	85050	1	T-Frame – HDV™	4	43118-1	1	Center Snow Control Kit
2	84623	2	Clevis Pin Kit	5	85125	4	Clevis Pin Kit
3	49844	1	Main Pivot Pin				
Item 2			**84623 Clevis Pin Kit**				
6		1	1 x 4-3/4 Clevis Pin	8		1	1/4 x 1-1/2 Cotter Pin
7		1	1" Flat Washer Special				
Item 4			**43118-1 Center Snow Control Kit**				
9		1	Snow Control	11		2	3/8-16 Hex Locknut GB
10		2	3/8-16 x 2 Hex Cap Screw G5				
Item 5			**85125 Clevis Pin Kit**				
6		1	1 x 4-3/4 Clevis Pin	8		1	1/4 x 1-1/2 Cotter Pin
G = Grade							

Headgear Components

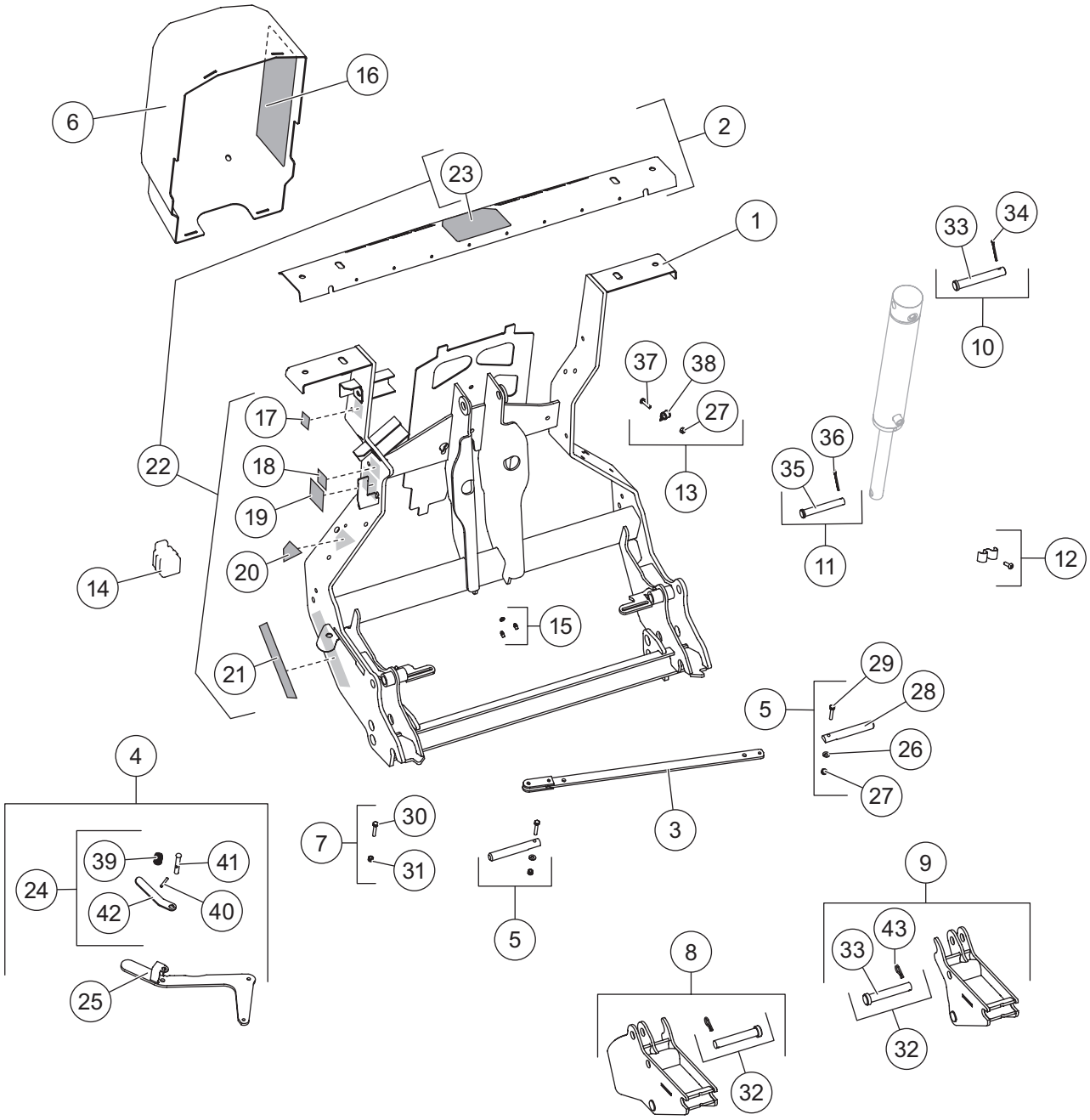

HEADGEAR ASSEMBLY

Headgear Components							
Item	**Part**	**Qty**	**Description**	**Item**	**Part**	**Qty**	**Description**
1	85005	1	Headgear – HDV™ (incl. item 15)	11	85124	1	Pin Kit – 5/8 x 4-14
2	85009	1	Light Bar Channel w/Label – HDV	12	49479-1	2	Hose Bracket Kit
3	85048	1	Link Arm – HDV	13	84778	1	Power Cable Clamp Loop Kit
4	84595	1	Attach Handle Kit	14	61246	1	Cable Boot
5	84603	2	Attach Pin Kit	15	84616	1	Grease Zerk (pkg of 3)
6	85049	1	Hydraulic Cover (incl. item 16)	16	52589	1	Label – Hydraulic Information, HDV
7	84635	1	Link Arm/Attach Handle Fastener Kit	17	52206	1	Label – Power Switch, Automatixx®
8	84608	1	Receiver Kit – DS	18	52207	1	Label – Operation Switch, Automatixx
ns	85121*	1	Receiver Kit, Tall – DS	19	69689	1	Label – Logo, SECURITY GUARD™
9	84609	1	Receiver Kit – PS	20	77717	1	Label – Logo, Automatixx Upper
ns	85122*	1	Receiver Kit, Tall – PS	21	77719	1	Label – Logo, Automatixx Lower
10	85123	1	Pin Kit – 3/4 x 5	22	84647	1	Headgear Label Kit (items 17–21, 23)
Item 2			**85009 Light Bar Channel w/Label – HDV**				
–		1	Light Bar	23	84553	1	Label – Logo, SnowEx® Light Bar
Item 4			**84595 Attach Handle Kit**				
24	84596	1	Attach Handle Release Cam Kit	25	84779	1	Handle
Item 5			**84603 Attach Pin Kit**				
26		1	1/4 Flat Washer	28		1	Hitch Pin
27		1	1/4-20 Hex Locknut GB	29		1	1/4-20 x 1-1/2 Hex Cap Screw SS
Item 7			**84635 Link Arm/Attach Handle Fastener Kit**				
30		1	5/16-18 x 1-1/4 Hex Cap Screw G5	31		1	5/16-18 Hex Locknut GB
Item 8			**84608 / 85121 (tall) Receiver Kit – DS**				
		1	Receiver – DS	32	84611	1	Receiver Pin Kit
Item 9			**84609 / 85122 (tall) Receiver Kit – PS**				
		1	Receiver – PS	32	84611	1	Receiver Pin Kit
Item 10			**85123 Pin Kit – 3/4 x 5**				
33	95739	1	3/4 x 5 Clevis Pin HT	34		1	1/8 Hairpin Cotter
Item 11			**85124 Pin Kit – 5/8 x 4-1/4**				
35		1	5/8 x 4-1/4 Clevis Pin	36		1	5/32 x 1-1/2 Cotter Pin
Item 13			**84778 Power Cable Clamp Loop Kit**				
27		1	1/4-20 Hex Locknut GB	38		1	#10 Clamp Loop
37		1	1/4-20 x 1 Hex Cap Screw G5				
Item 24			**84596 Attach Handle Release Cam Kit**				
39		1	Stand Lock Pin Spring	41		1	Handle Lock Pin
40		1	3/16 x 1-3/8 Roll Pin SS	42		1	Handle Lock Pin Lever
Item 32			**84611 Receiver Pin Kit**				
33	95739	1	3/4 x 5 Clevis Pin HT	43	42142	1	R-Pin Cotter
ns = not shown			SS = Stainless Steel	HT = Heat Treated			G = Grade

* Refer to the HDV Snowplow Installation Instructions to confirm when tall receivers are required.

Hydraulic Unit

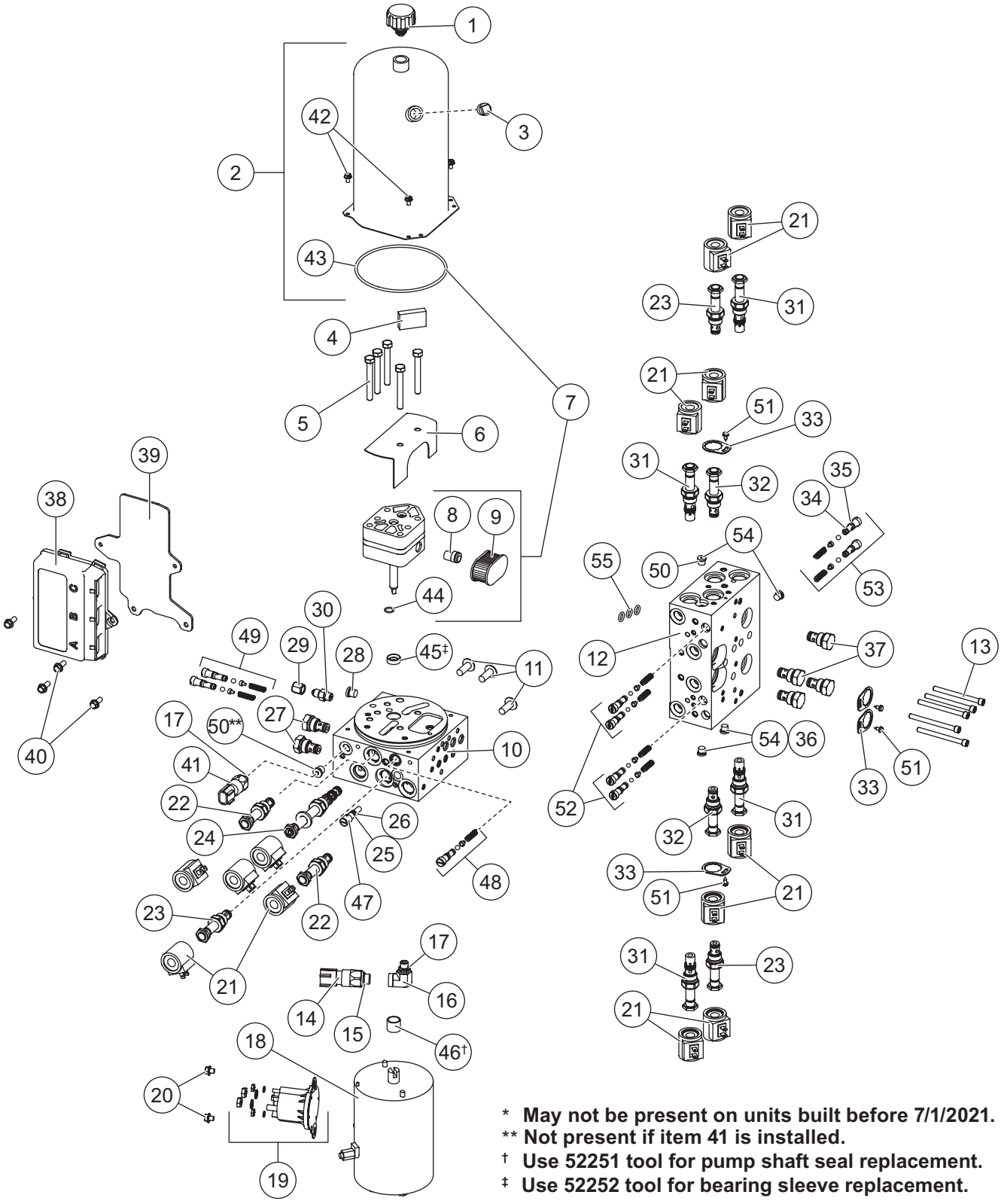

* **May not be present on units built before 7/1/2021.**
** **Not present if item 41 is installed.**
† **Use 52251 tool for pump shaft seal replacement.**
‡ **Use 52252 tool for bearing sleeve replacement.**

52651 Hydraulic Unit – V-Plow							
Item	**Part**	**Qty**	**Description**	**Item**	**Part**	**Qty**	**Description**
1	48278	1	Breather	21	52294	13	Coil
2	52631	1	Reservoir Kit	22	84936	2	Valve, 2-Way NC w/Rev Flow
3	92079	1	Plug, Square 3/8 NPTF	23	49690	3	Valve, 2-Way w/Nut
4	73897	1	Magnet	24	84937	1	Valve, 4-Way, 3-Position
5		5	5/16-18 x 2-1/2 Hex Cap Screw G5	25	48239	1	O-Ring -106
6	84889	1	Baffle Plate	26	48240	1	Back-Up Ring -106
7	49487	1	Hydraulic Pump Kit	27	84934	2	Check Valve
8	10887	1	Pump Inlet Fitting	28	44344	2	Plug, Hex Socket –4 M ORB
9	48281	1	Filter	29	52642	1	Cap –4 F JIC
ns	52252	1	Seal Repair Tool Kit w/Seal	30	B60004	1	Connector, Short –4 M JIC/ –4 M ORB
10	52579	1	Primary Manifold Assy w/o Valves HD				
11		3	3/8-16 x 1-1/4 Serrated Flange Hex Cap Screw	31	49489	4	Valve, 2-Way w/Check
				32	52587	2	Valve, SF08-2015 w/Nut
12	52582	1	Secondary Manifold Assy w/o Valves	33	44369	4	Valve Lock Ring w/Screw
13		5	1/4-20 x 3 Socket Cap Screw	34	55371	8	O-Ring -008
14	84841	1	Pressure Switch	35	25731	8	O-Ring -010
15	56569	1	O-Ring -906	36	26784	4	O-Ring -903
16	52295	1	Elbow, 90° –4 M ORB/–6 F ORB	37	48287	4	Check Valve
17	44343	4	O-Ring -904	38	52292-2	1	Plow Control Module
ns	52251	1	Bearing Repair Tool Kit w/Bearing	39	52293-1	1	Module Plate
18	52281	1	Motor	40	44355	4	1/4-20 x 5/8 Hex Washer-Head Thread-Rolling Screw
19	52578	1	Motor Relay Kit, FLEET FLEX System				
20	29099	2	1/4-20 x 1/4 Hex Washer-Head Thread-Rolling Screw	41	83859	1	Pressure Switch (Scrape Maxx™ down-force feature)
O-Ring Service Kits							
–	52298-1	–	O-Ring Kit	–	48310	–	Seal Kit, 2-Way Valves
–	48309	–	Seal Kit, 3-Way & 4-Way Valves				
Item 10			**52579 Primary Manifold Assembly w/o Valves HD**				
42	66607	4	#10-24 x 5/16 Machine Screw	47	48517	1	Quill
43	66519	1	O-Ring 2-250	48	52282	1	Relief Valve (1 set)
44	56274	1	O-Ring -013	49	52284	2	Relief Valve (1 set)
45‡	66515	1	Pump Shaft Seal	50	44344	4	Plug, Hex Socket –4 M ORB
46†	56364	1	Bearing Sleeve				
Item 16			**52582 Secondary Manifold Assembly w/Valves**				
51		4	#8-18 x 3/8 Tapping Screw	54	92960	4	Plug, Hex Socket –3 M ORB
52	44356	2	Relief Valve Kit (2 sets)	55	29077	3	O-Ring -110
53	52283	1	Relief Valve (2 sets)				
ns = not shown			F = Female	M = Male			G = Grade

† Use 52251 tool to install.
‡ Use 52252 tool to install.

Go to *www.snowexproducts.com* for hydraulic unit service information and specifications.

Lift and Angle Ram Components

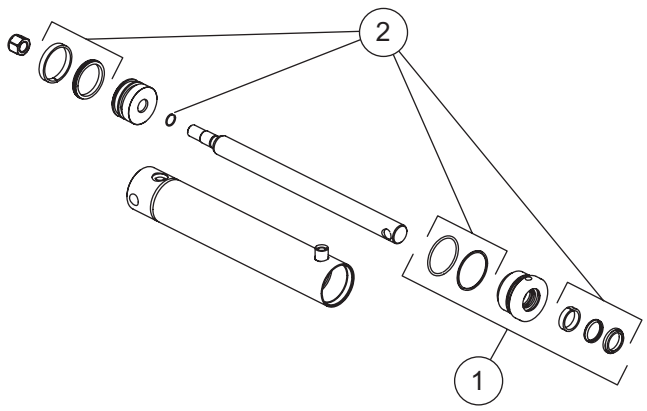

90925 Lift Ram Assembly 2-1/2 x 11-3/4 (Black) 52632* Lift Ram Assembly 2-1/2 x 11-3/4 (Red)			
Item	**Part**	**Qty**	**Description**
1	52633	1	Gland Assembly 1-1/4
2	52634	1	Seal Kit 2-1/2 DA Ram

* Discontinued

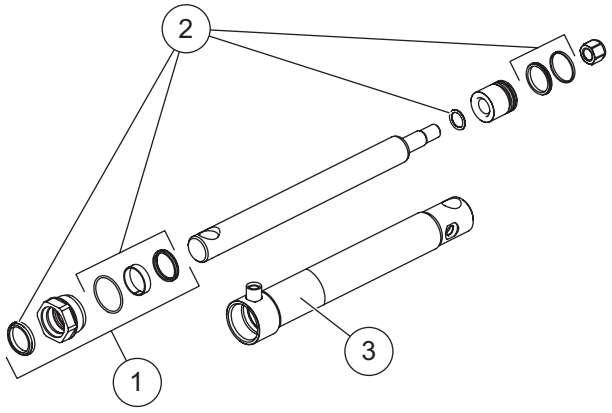

91585 Ram Assembly 1-3/4 x 11 DA (Black) 52635* Ram Assembly 1-3/4 x 11 DA (Red)			
Item	**Part**	**Qty**	**Description**
1	48985	1	Gland Assembly 1-1/2
2	84832	1	Seal Kit 1-3/4 DA Ram
3	84906	1	Label – Identity, Double-Acting Cylinder

* Discontinued

Go to *www.snowexproducts.com* for hydraulic unit service information and specifications.

Hoses and Fittings

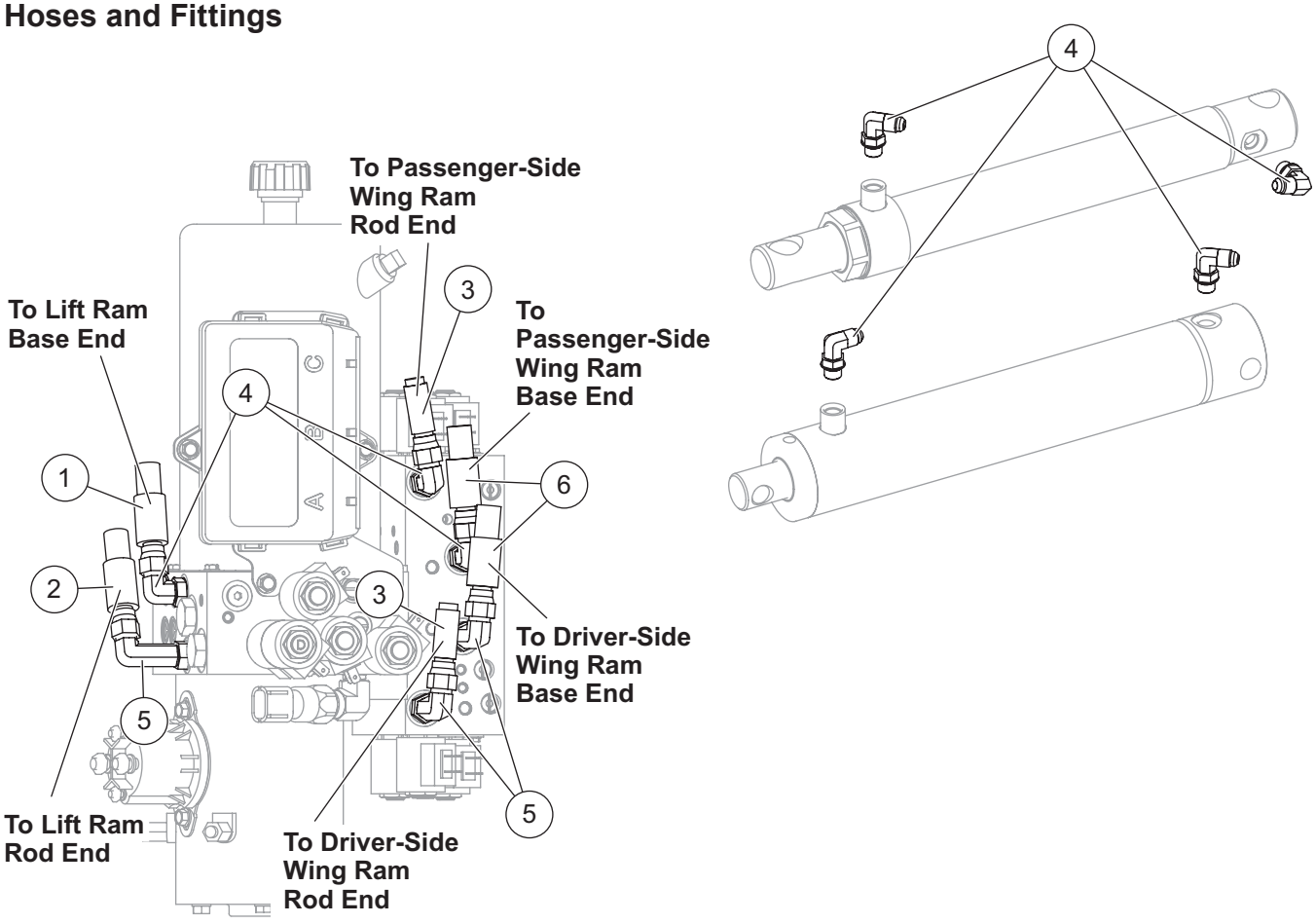

Hoses and Fittings							
Item	**Part**	**Qty**	**Description**	**Item**	**Part**	**Qty**	**Description**
1	84926	1	Hose, 3/8 x 14 w/F JIC Ends	5	40572	3	Elbow, Extra Long 90° –6 M JIC/ –6 M ORB
2	84897	1	Hose, 3/8 x 26 w/F JIC Ends				
3	85107	2	Hose, 1/4 x 67 w/F JIC Ends	6	85104	2	Hose, 3/8 x 67 w/F JIC Ends
4	56615-1	9	Elbow, 90° –6 M JIC/–6 M ORB	ns	56823	4	Hose Wrap
F = Female				ns = not shown			M = Male

Electrical Components

Not drawn to scale.

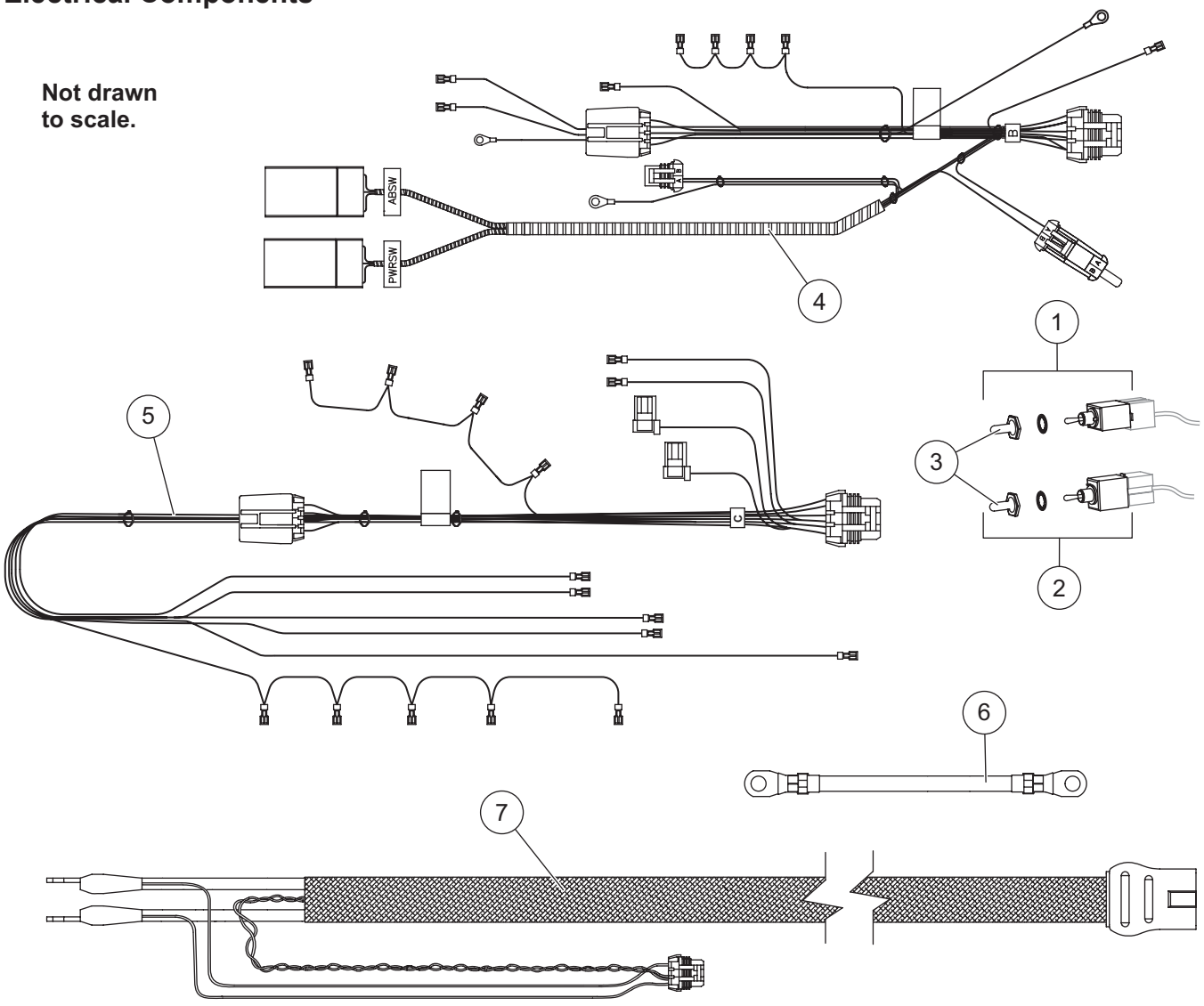

Plow control module is shown with hydraulic unit; cable boot shown on Headgear Assembly page.

Plow-Side Electrical Components							
Item	**Part**	**Qty**	**Description**	**Item**	**Part**	**Qty**	**Description**
1	40575	1	Toggle Switch (MOM-ON, OFF, ON)	5	52563	1	Harness Plow Control, 9-Coil
2	40576	1	Toggle Switch (MOM-ON, OFF, MOM-ON)	6	29071	1	Cable Assembly 8"
				7	52291	1	Plow Battery Cable
3	48259	2	Switch Boot	ns		4	Fuse, 5A Mini Automotive-Style (for items 4 and 5)
4	52108	1	Harness Plow Control, 4-Coil				
Vehicle-Side Electrical Components							
*	72527	1	Vehicle Battery Cable	ns	48325	2	Plug Cover
*	28587	1	Vehicle Control Harness				
ns = not shown							

* For diagram see Vehicle-Side Harness Diagram.

Vehicle-Side Harness Diagram
3-Port, 2-Plug System

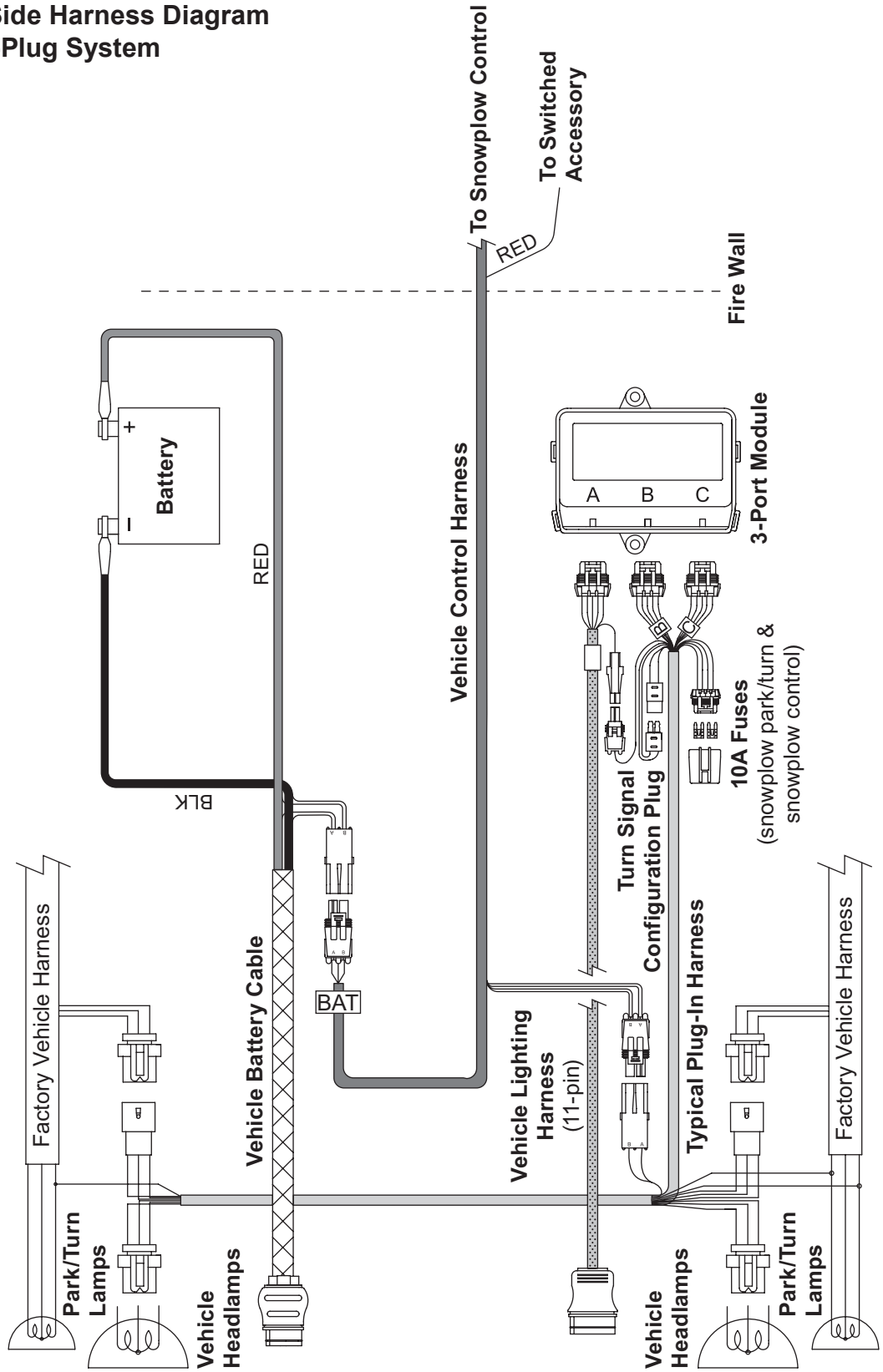

Headlamp Kit – Halogen

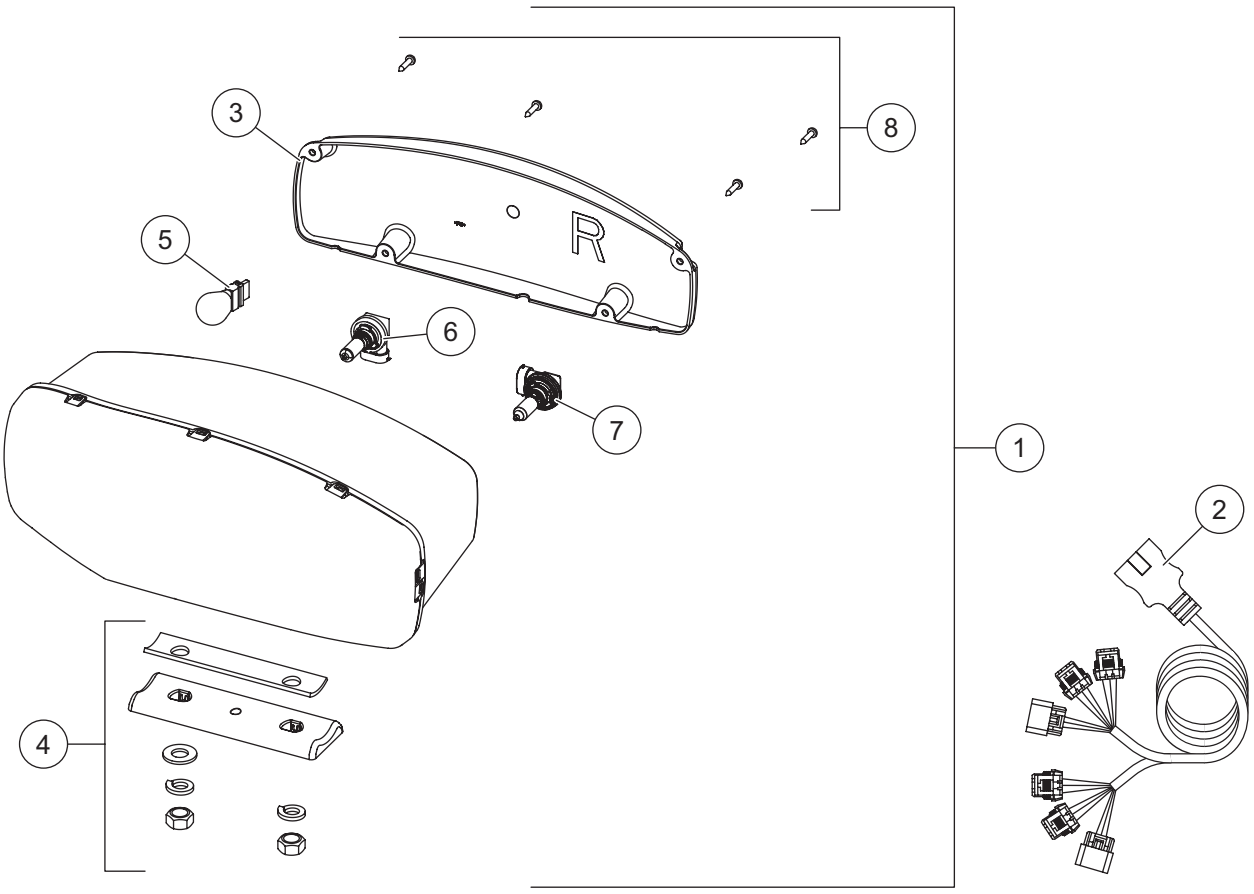

38800 Headlamp Kit H9/H11 (pair)							
Item	**Part**	**Qty**	**Description**	**Item**	**Part**	**Qty**	**Description**
1	38802	1	Headlamp Service Kit H9/H11 – PS	2	38807	1	Harness Service Kit H9/H11
ns	38801	1	Headlamp Service Kit H9/H11 – DS				
Item 1	**38801/38802 Headlamp Service Kit H9/H11 – PS/DS**						
3	38803	1	Rear Cover Kit H9/H11 – PS	6	38811	1	Headlamp Bulb Service Kit H11
ns	38812	1	Rear Cover Kit H9/H11 – DS	7	38809	1	Headlamp Bulb Service Kit H9
4	38804	1	Mounting Hardware Kit H9/H11	8	38808	1	Cover Screws Service Kit H9/H11 (pkg of 4)
5		1	Park/Turn Bulb (trade no. 4157NAK)				
ns = not shown							

Headlamp Kit – LED

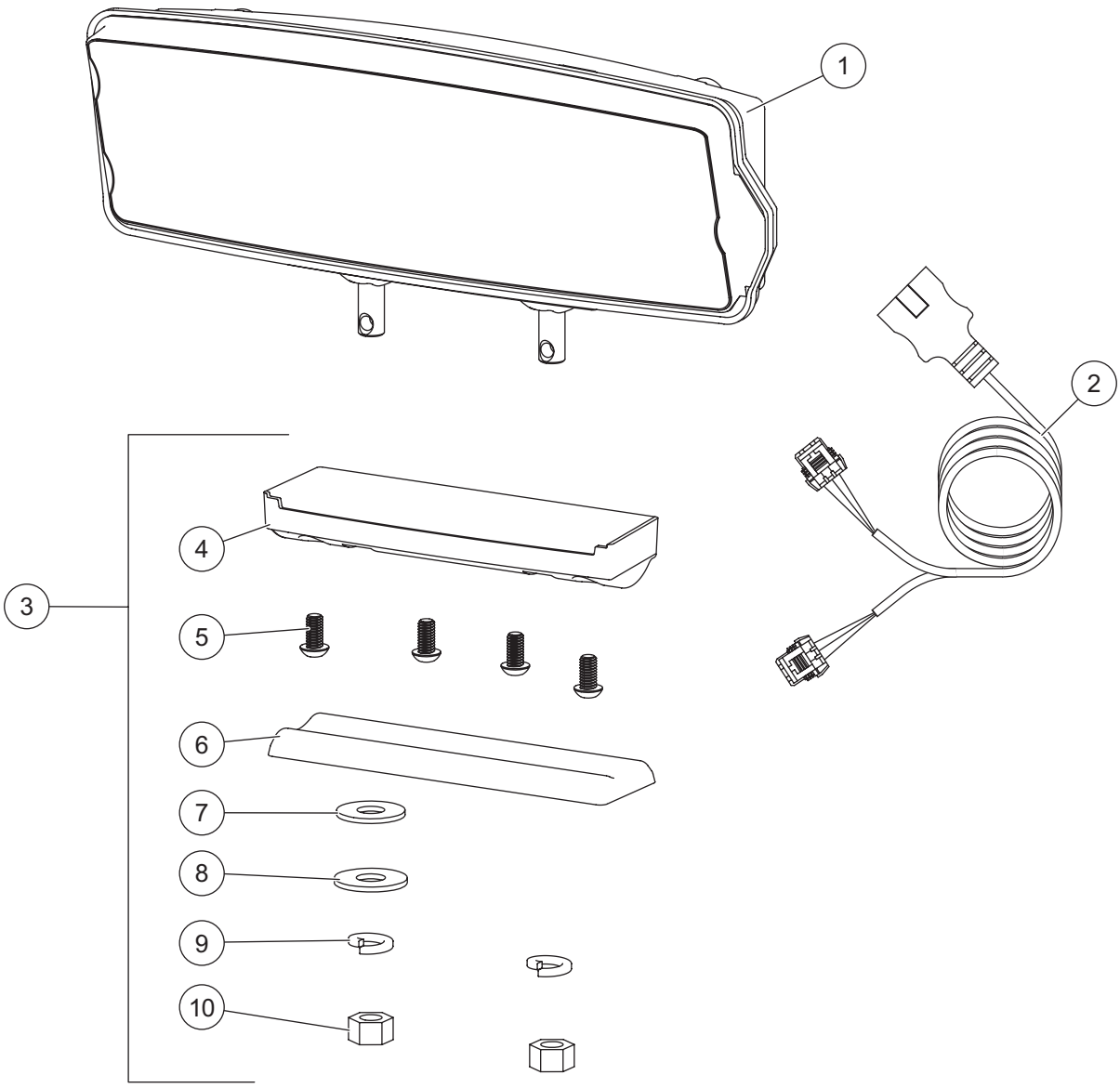

Headlamp Kit LED							
Item	**Part**	**Qty**	**Description**	**Item**	**Part**	**Qty**	**Description**
1	39901	1	Headlamp Service Kit LED – DS	3	39903	1	Mounting Hardware Kit LED
ns	39902	1	Headlamp Service Kit LED – PS	ns	72512	1	LED Harness Connector Cover (pkg of 2)
2	72548	1	Harness Service Kit LED				
Item 3			**39903 Mounting Hardware Kit LED**				
4		1	Plastic Casing	8		1	1/2 Flat Washer
5		4	1/4 Button Cap Screw	9		2	1/2 Lock Washer
6		1	Headlamp Swivel	10		2	1/2 Hex Nut
7		1	1/2 Rubber Washer	ns		1	Metal Insert
ns = not shown							

TrynEx International, LLC
531 Ajax Drive
Madison Heights, MI 48071-2429
www.snowexproducts.com

A DIVISION OF DOUGLAS DYNAMICS, LLC

Copyright © 2026 Douglas Dynamics, LLC. All rights reserved. This material may not be used, reproduced, or copied in any manner, in whole or in part, in any printed, mechanical, electronic, film, or other distribution and storage media, nor analyzed or manipulated in any manner for the purpose of training artificial intelligence technologies or systems, without the written consent of TrynEx International, LLC. In accordance with Article 4(3) of the Digital Single Market Directive 2019/790, TrynEx International expressly reserves this work from the text and data mining exception. Authorization to photocopy items for internal or personal use by TrynEx International outlets or equipment owner is granted.

TrynEx International reserves the right under its product improvement policy to change construction or design details and furnish equipment when so altered without reference to illustrations or specifications used. TrynEx International or the vehicle manufacturer may require or recommend optional equipment for snow removal. Do not exceed vehicle ratings with a snowplow. TrynEx International offers a limited warranty for all equipment and accessories. See separately printed page for this important information. The following are registered (®) or unregistered (™) trademarks of Douglas Dynamics, LLC: Automatixx®, HDV™, Scrape Maxx™, SECURITY GUARD™, SnowEx®.

Printed in U.S.A.